YAMAHA

SR125

www.ClassicCycles.org

SUPPLEMENTARY SERVICE MANUAL

FOREWORD

This Supplementary Service Manual has been prepared to introduce new service and data for the SR125 ’99. For complete service information procedures it is necessary to use this Supplementary Service Manual together with the following manual.

SR125 SERVICE MANUAL: 3MW-AE1
SR125 SUPPLEMENTARY SERVICE MANUAL: 3MW-AE2

EB001000

IMPORTANT INFORMATION

Particularly important information is distinguished in this manual by the following notations.

⚠	The Safety Alert Symbol means ATTENTION! BECOME ALERT! YOUR SAFETY IS INVOLVED!
⚠ WARNING	Failure to follow WARNING instructions could result in severe injury or death to the scooter operator, a bystander or a person inspecting or repairing the scooter.
CAUTION:	A CAUTION indicates special precautions that must be taken to avoid damage to the scooter.
NOTE:	A NOTE provides key information to make procedures easier or clearer.

YP002000

HOW TO USE THIS MANUAL

MANUAL ORGANIZATION

This manual consists of chapters for the main categories of subjects. (See “Illustrated symbols”)

1st title ①: This is the title of the chapter with its symbol on the upper right corner of each page.

2nd title ②: This title indicates the section of the chapter and only appears on the first page of each section. It is located in the upper left corner of the page.

3rd title ③: This title indicates a sub-section that is followed by step-by-step procedures accompanied by corresponding illustrations.

EXPLODED DIAGRAMS

To heps identify parts and clarify procedure steps, there are exploded diagrams at start of each removal and disassembly section.

1. An easy-to-see exploded diagram ④ is provided for disassembly and assembly jobs.
2. Numbers ⑤ are given in the order of jobs in the exploded diagram. A number that is enclosed by a circle indicates a disassembly step.
3. An explanation of jobs and notes is presented in an easy-to-read way by the use of symbol marks ⑥. The meanings of the symbol marks are given on the next page.
4. A job instruction chart ⑦ accompanies the exploded diagram, providing the order of jobs, names of parts, notes in jobs, etc.
5. For jobs requiring more information, the step-by-step format supplements 8 are given in addition to the exploded diagram and the job instruction chart.

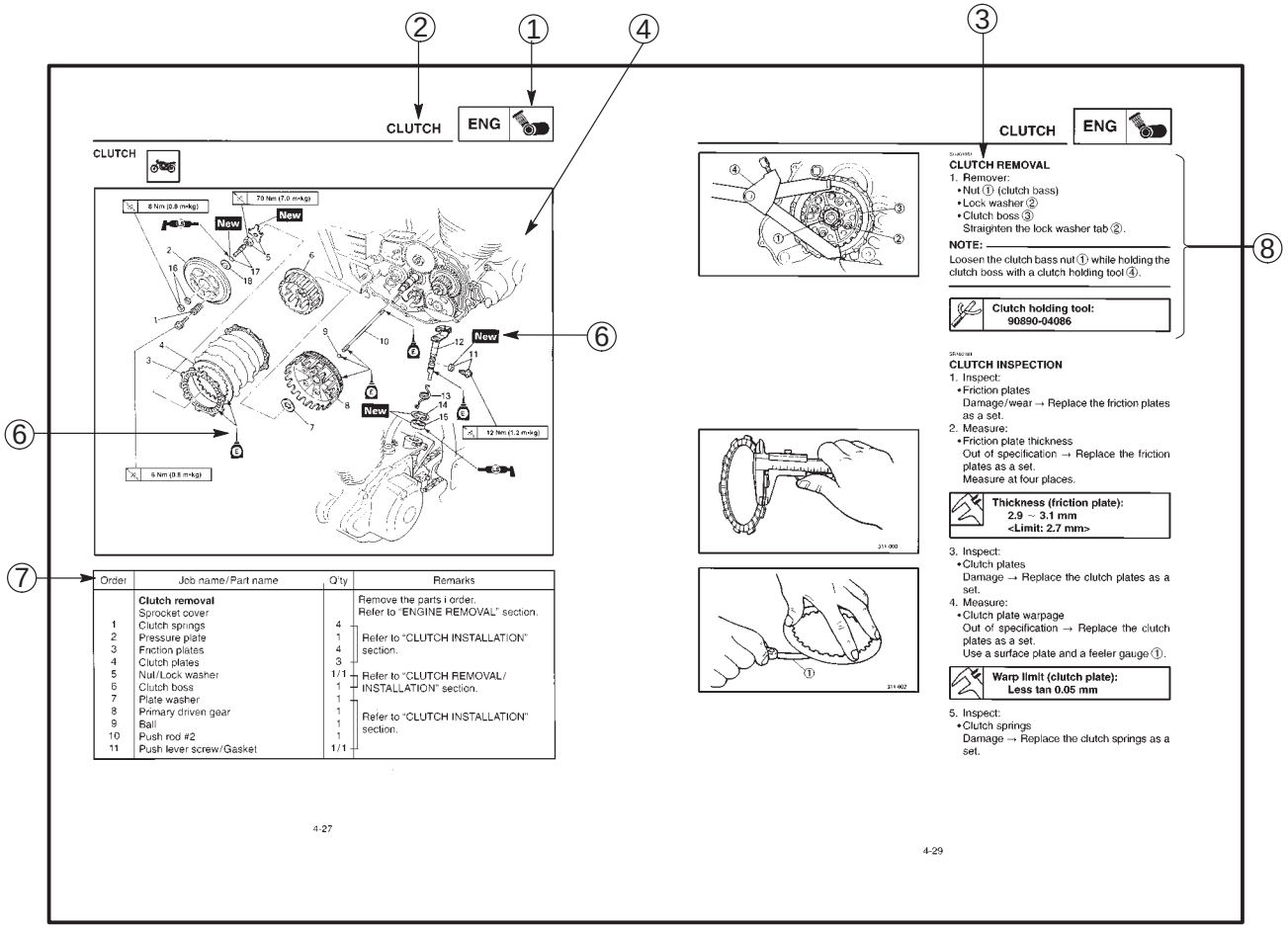

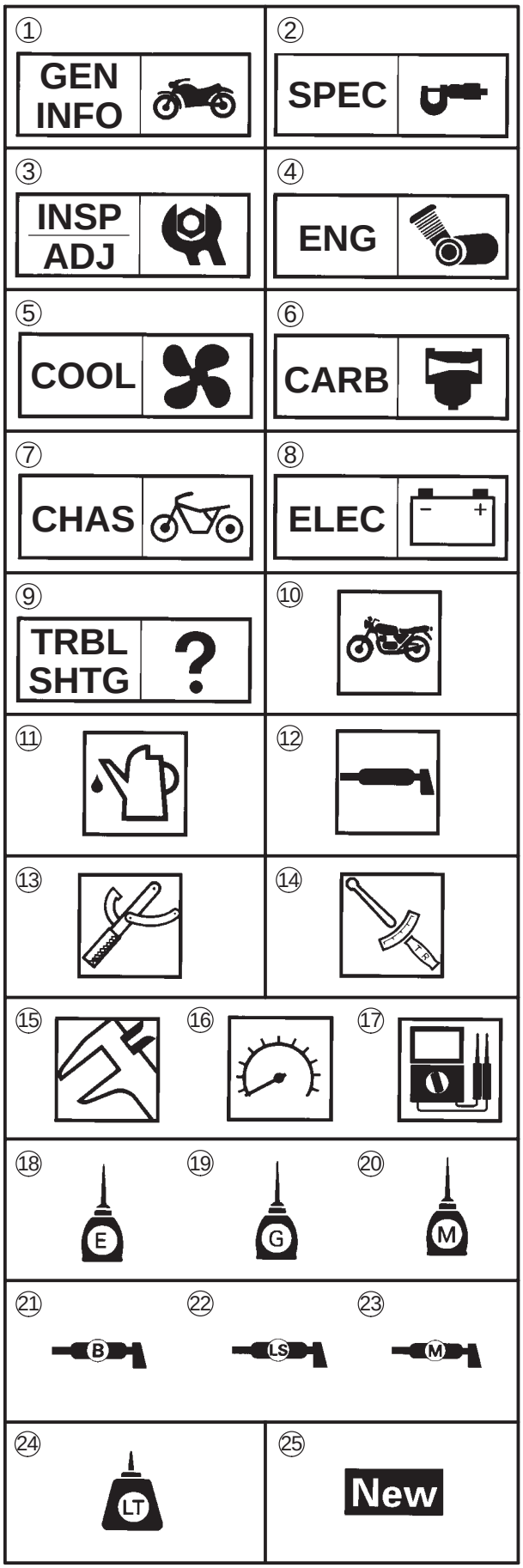

EB003000

ILLUSTRATED SYMBOLS

Illustrated symbols ① to ⑨ are designed as thumb tabs to indicate the chapter's number and content.

① General information
② Specifications
③ Periodic inspection and adjustment
④ Engine
⑤ Cooling system
⑥ Carburetion
⑦ Chassis
⑧ Electrical
⑨ Troubleshooting

Illustrated symbols ⑩ to ⑰ are used to identify the specifications appearing in the text.

⑩ Possible to maintain with engine mounted
⑪ Filling fluid
⑫ Lubricant
⑬ Special tool
⑭ Tightening
⑮ Wear limit, clearance
⑯ Engine speed
⑰ Ω, V, A

Illustrated symbols ⑱ to ㉓ in the exploded diagrams indicate the types of lubricants and lubrication points.

⑱ Apply engine oil
⑲ Apply gear oil
⑳ Apply molybdenum disulfide oil
㉑ Apply wheel bearing grease
㉒ Apply lightweight lithium-soap base grease
㉓ Apply molybdenum disulfide grease

Illustrated symbols ㉔ to ㉕ in the exploded diagrams indicate the where to apply locking agent ㉔ and when to install new parts ㉕.

㉔ Apply locking agent (LOCTITE®)
㉕ Use new one

CONTENTS

GENERAL SPECIFICATIONS
GENERAL SPECIFICATIONS 1
MAINTENANCE SPECIFICATIONS 2
ENGINE 2
CHASSIS 2
ELECTRICAL 2
TIGHTENING TORQUES 3
ENGINE 3
CHASSIS 3
CABLE ROUTING 4

PERIODIC INSPECTIONS AND ADJUSTMENTS
CHECKING AND ADJUSTING THE STEERING HEAD 9
CHECKING AND ADJUSTING THE STEERING HEAD 9

ENGINE OVERHAUL
CYLINDER HEAD 11
CYLINDER HEAD 11
CHECKING THE TIMING CHAIN TENSIONER 12
CYLINDER HEAD INSTALLATION 12

CHASSIS
STEERING 15
UNDER BRACKET 15

’99 SR125 WIRING DIAGRAM

SPECIFICATIONS

GENERAL SPECIFICATIONS

Model	SR125
Model code:	3MW8
Dimensions: Overall height	 1,100 mm
Chassis: Caster angle Trail	 26.75 90 mm
Wheel travel: Rear wheel travel	 76 mm
Bulb wattage quantity: Headlight Auxiliary light Tail/brake light Flasher light Meter light High beam indicator Neutral indicator Turn indicator	 12 V 60 W/55 W 1 12 V 4 W 1 12 V 5 W/21 W 1 12 V 21 W 4 14 V 3 W 1 12 V 1.7 W 1 12 V 1.7 W 1 12 V 1.7 W 1

MAINTENANCE SPECIFICATIONS

ENGINE

Item	Standard	Limit
Cam chain:		
Cam chain type/No. of links	DID 25SH/104 ENDLESS	□□□
Cam chain adjustment	Automatic	□□□
Carburetor:		
Engine idle speed	1,300 – 1,400 rpm	□□□

CHASSIS

Item	Standard	Limit
Steering system:		
Steering bearing type	Angular bearing	□□□
Front suspension:		
Fork spring free length	353.4 mm	321 mm
Fitting length	338.4 mm	□□□
Oil capacity	0.187 L (187 cm^3)	□□□
Oil level	138 mm	□□□
Oil grade	Fork oil 10 W or equivalent	□□□

ELECTRICAL

Item	Standard	Limit
Ignition coil:		
Primary winding resistance	0.184 – 0.276 Ω at 20□C	□□□
Secondary winding resistance	6.32 – 9.48 kΩ at 20□C	□□□
Flasher relay:		
Type	Full transistor type	□□□
Model/manufacturer	FE246BH/DENSO	□□□
Flasher frequency	75 – 95 cycle/min	□□□

TIGHTENING TORQUES
ENGINE

Part to be tightened	Part name	Thread size	Q'ty	Tightening torque		Remarks
				Nm	m□kg	
Timing chain tensioner bolt	Bolt		2	10	0.1	
Timing drain tensioner cap bolt	Bolt		1	10	0.1	

CHASSIS

Part to be tightened	Thread size	Tightening torque		Remarks
		Nm	m□kg	
Handle crown and front fork	M8	19	1.9	
Handle crown and steering shaft	M22	110	11.0	
Handlebar holder (under and upper)	M8	20	2.0	
Steering ring nut	M25	4	0.4	Refer to NOTE

NOTE:

1. First, tighten the ring nut to approximately 38 Nm (3.8m□kg)with a torque wrench, then loosen the ring nut completely.
2. Retighten the ring nut to specification.

CABLE ROUTING

① Speed meter cable
② Handlebar switch lead (left)
③ Main switch lead
④ Front brake switch lead
⑤ Throttle cable
⑥ Brake hose
⑦ Handlebar switch lead (right)
⑧ Clutch cable
⑨ Clutch switch lead
⑩ Right flasher lead
⑪ Left flasher lead
⑫ Wireharness
⑬ Horn lead
⑭ Headlight earth lead
⑮ Auxilialy light lead
⑯ Meter lead

A Faster the handlebar switch lead (left and right) front brake switch lead clutch switch lead to the handlebar with a band.
B Don't contact the horn and wire-harness.
C To auxiliary light.
D To headlight.

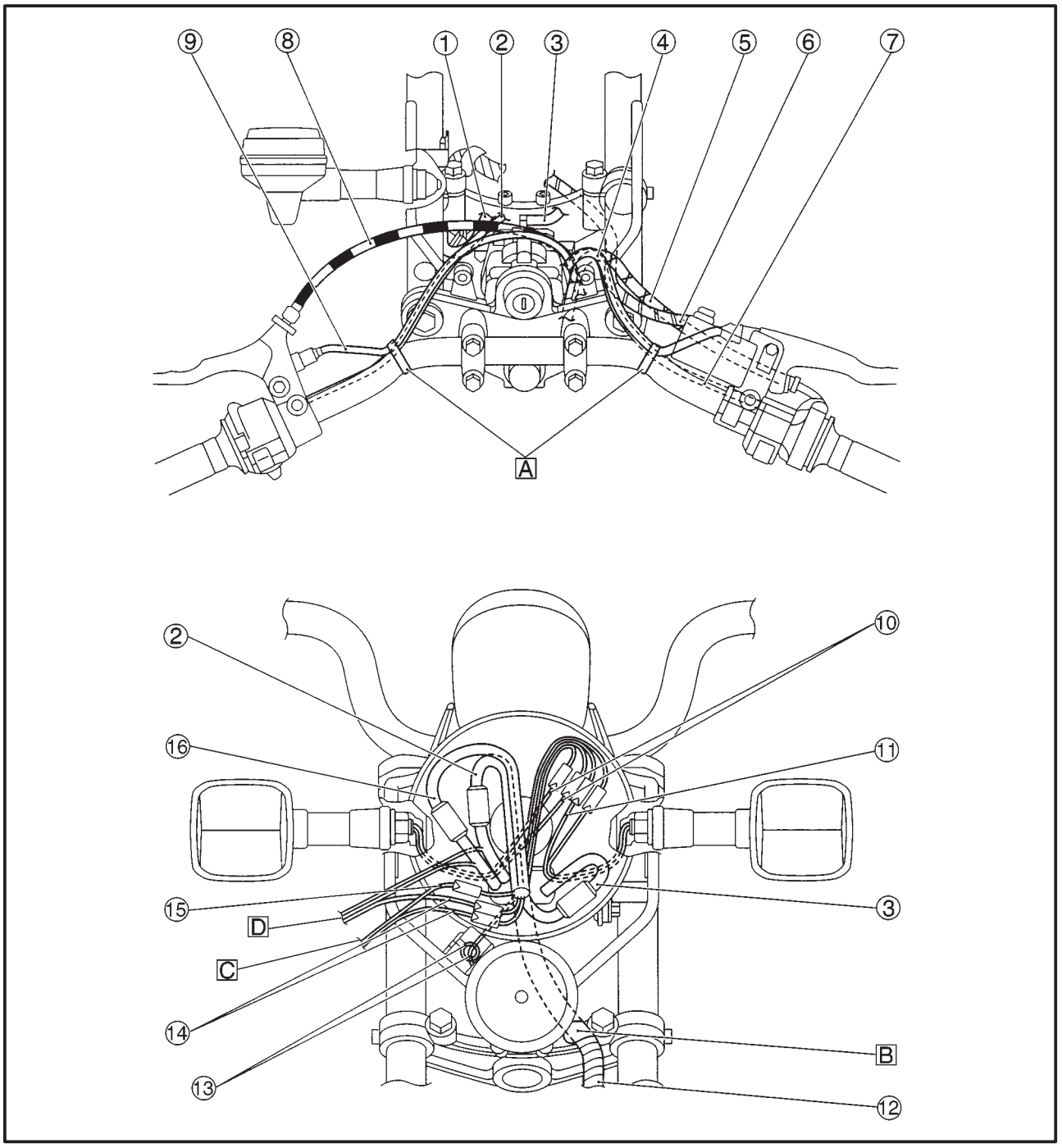

① Flasher relay
② Clamp
③ Wireharness
④ High tension cord
⑤ Collar
⑥ Ignition coil
⑦ Earth lead
⑧ Ignition coil lead
⑨ Throttle cable
⑩ Brake hose
⑪ Brake hose holder
⑫ Wire guide
⑬ Clutch cable guide
⑭ Right handlebar switch lead
⑮ Front brake switch lead
⑯ Clutch switch lead
⑰ Clutch cable
⑱ Rear stop switch
⑲ Sidestand relay
⑳ Battery breather hose

A Align the clamp to the white tape on the wireharness.
B Route the brake hose through the brake hose holder.
C Route the clutch cable through the clutch cable guide.
D Route the throttle cable, front brake switch lead handlebar switch lead through the guide.

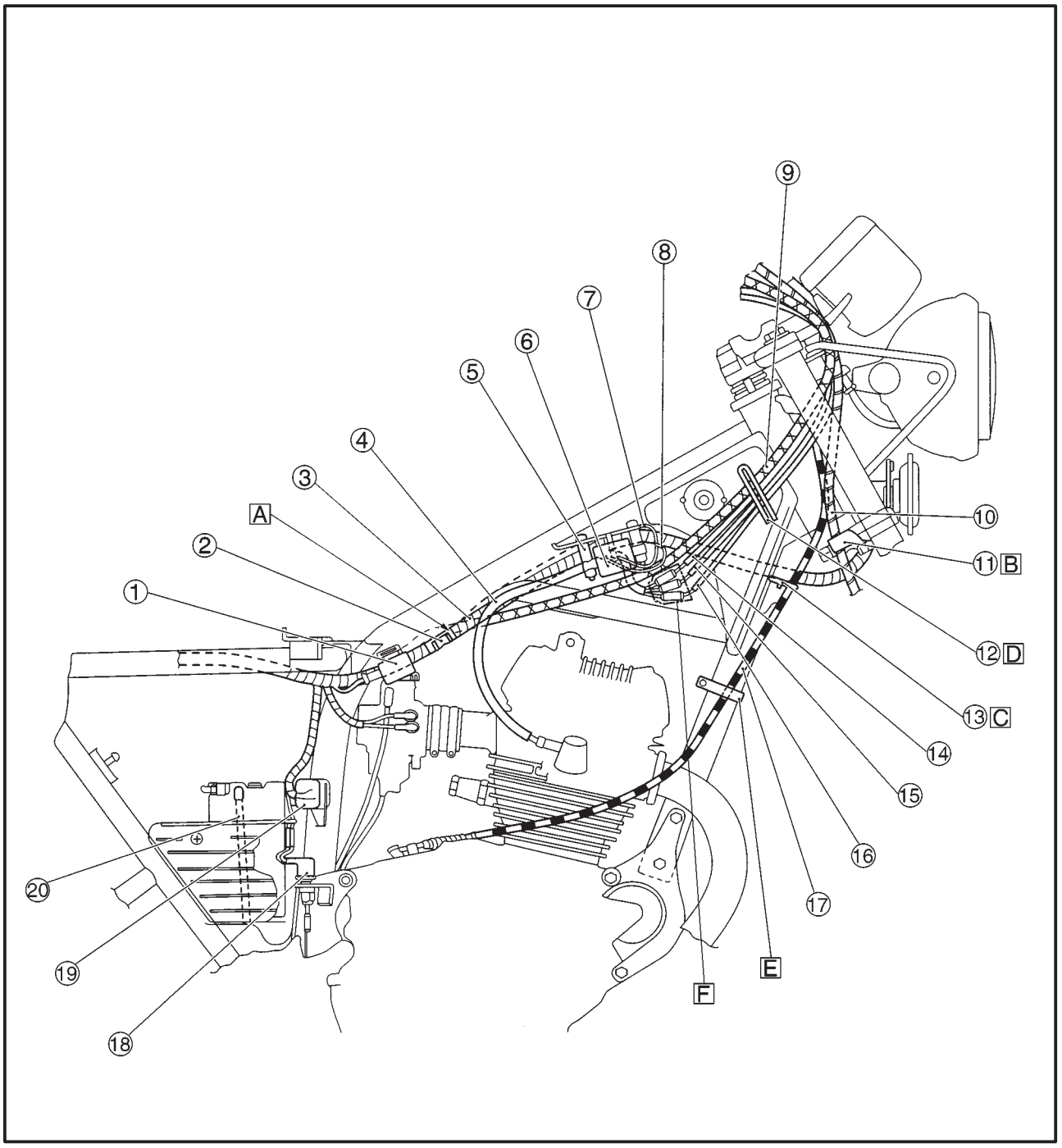

E Clamp the clutch cable to the down tube of the frame.
F Cover the sack to the couplers.

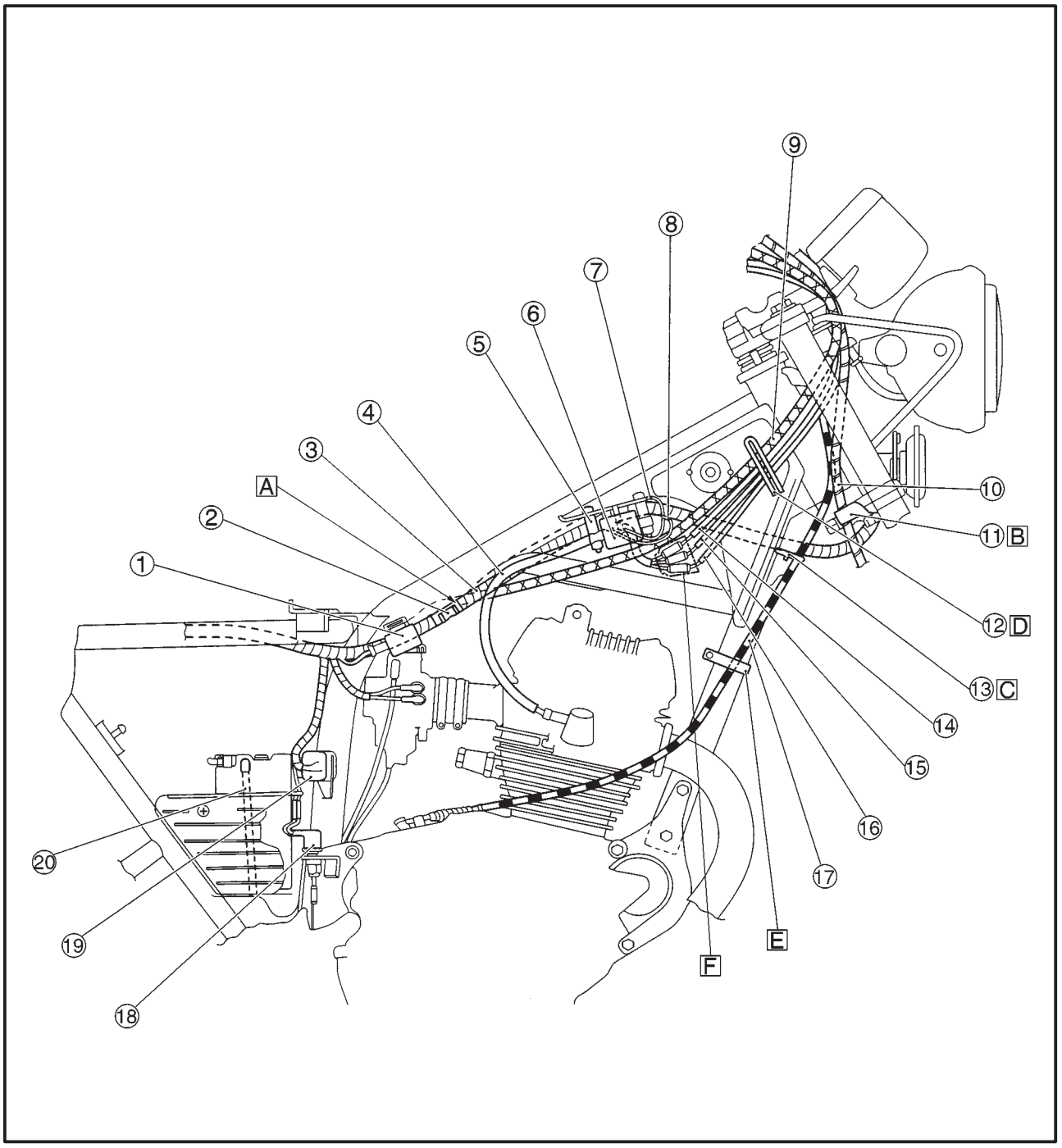

① Pick up coil lead
② Neutral switch lead
③ C.D.I unit
④ Rear flasher lead (right)
⑤ Rear flasher lead (left)
⑥ Tail/Brake light lead
⑦ Clutch switch lead
⑧ Wireharness
⑨ Clamp
⑩ Throttle cable
⑪ Thermo switch lead
⑫ Thermo switch
⑬ Battery negative lead
⑭ Starter motor lead
⑮ Rectifier/Regulator
⑯ Starter relay
⑰ Battery positive lead
⑱ Side stand switch lead
⑲ Side stand switch
⑳ Clutch cable
㉑ Wire guide
㉒ Brake hose
㉓ Brake hose holder
㉔ Wire holder
㉕ Speed meter cable
㉖ Handlebar switch lead

A Fasten the junction to the wire-harness with a band and cut the end of band. (except for ignition coil lead and earth lead.)
B Clamp the sidestand switch lead, battery negative lead and cut the end.
C Route the battery positive lead between air filter case and mud guard set the battery positive terminal.

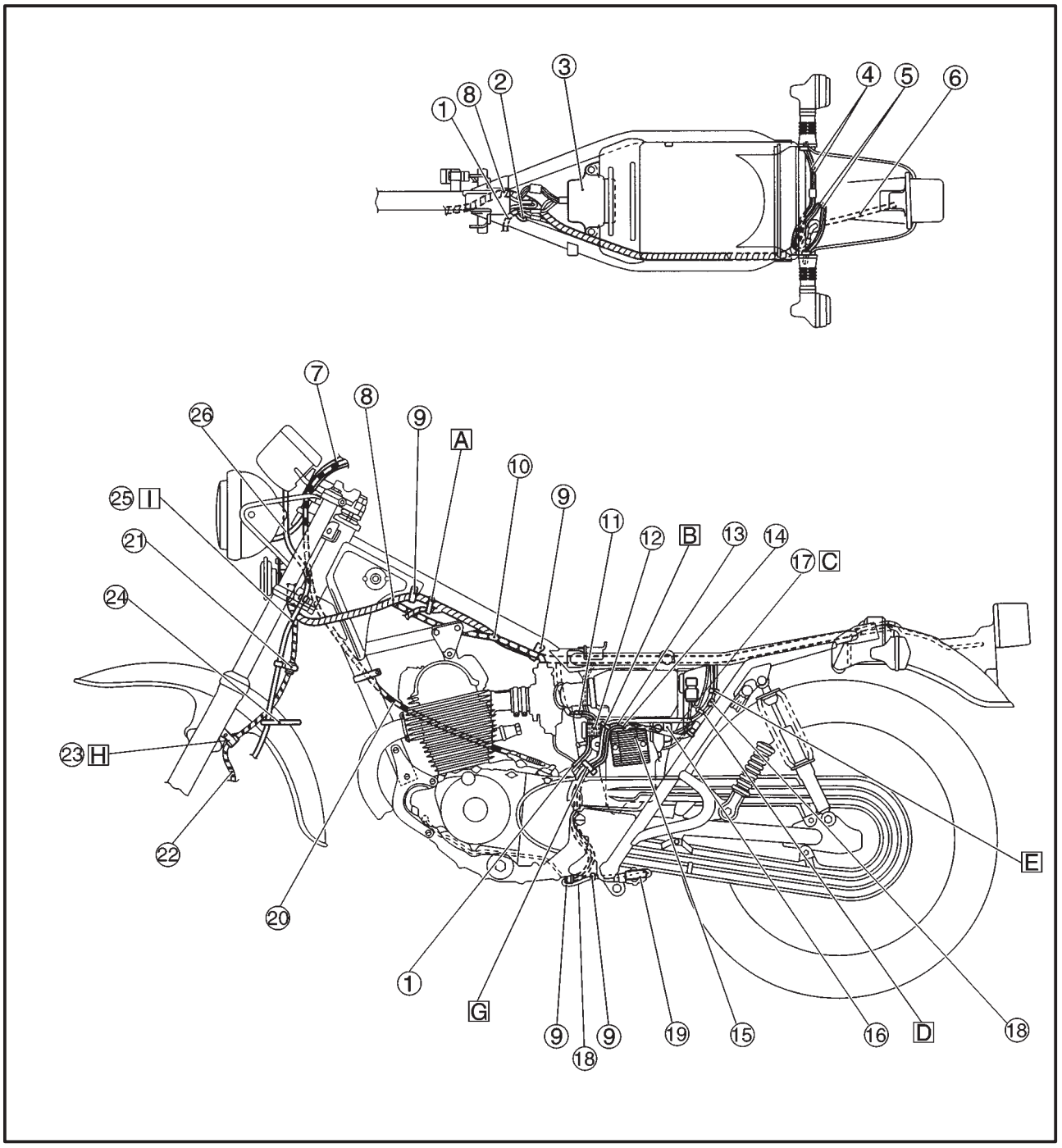

D Route the leads inside the frame bracket.
E Clamp the starter relay lead rectifier/regulator lead and side-stand switch lead.
F Clamp the rectifier/regulator lead.
G Fasten the leads witin 40 m from rectifire/regulator with a band.
H Route the brake hose through the brake hose holder.
I Clamp the speed meter cable to the under bracket and through the wire holder of front fender.

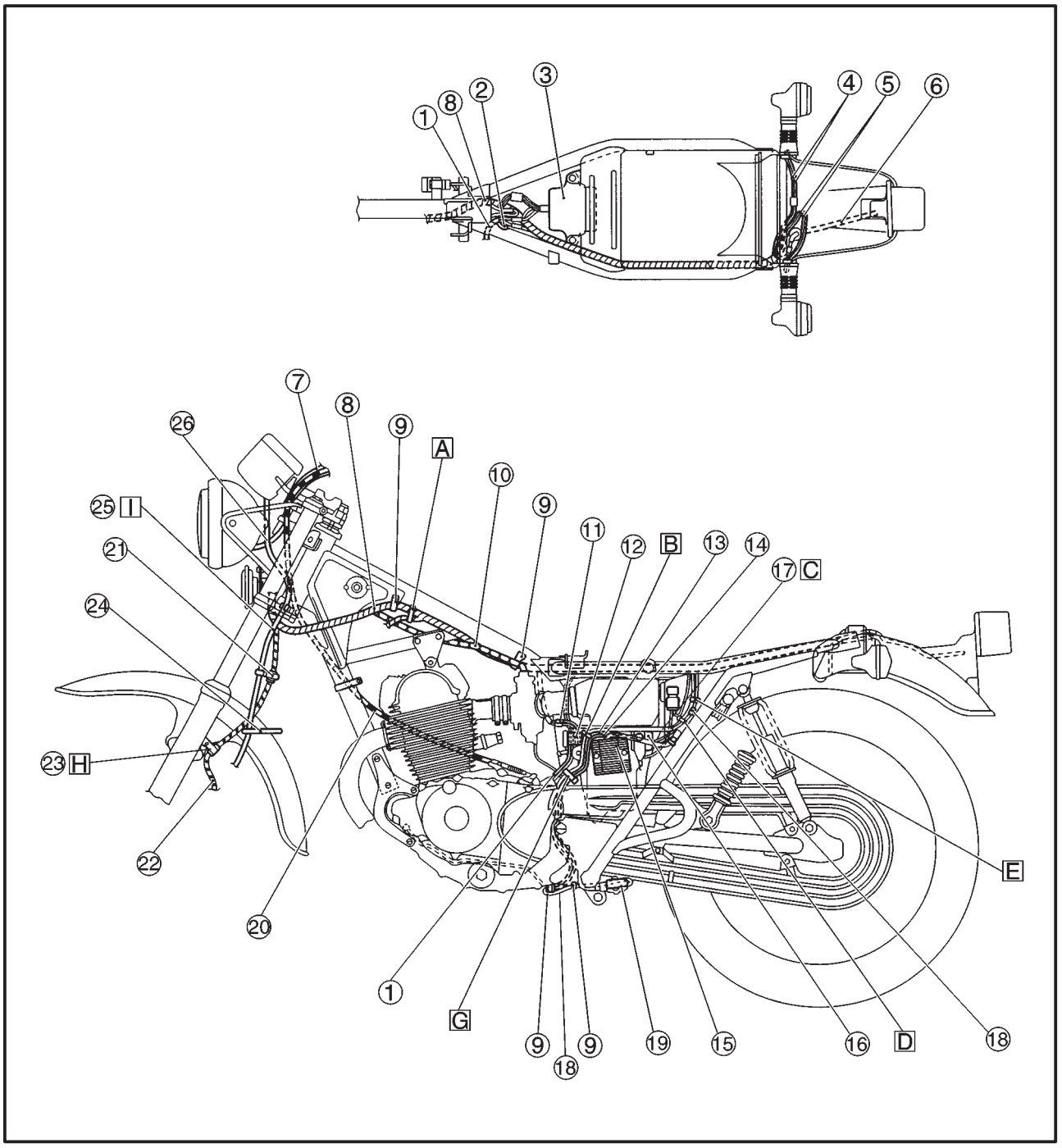

EB304130

CHECKING AND ADJUSTING THE STEERING HEAD

1. Stand the motorcycle on a level surface.

WARNING

Securely support the motorcycle so that there is no danger of it falling over.

NOTE:

Place the motorcycle on a suitable stand so that the front wheel is elevated.

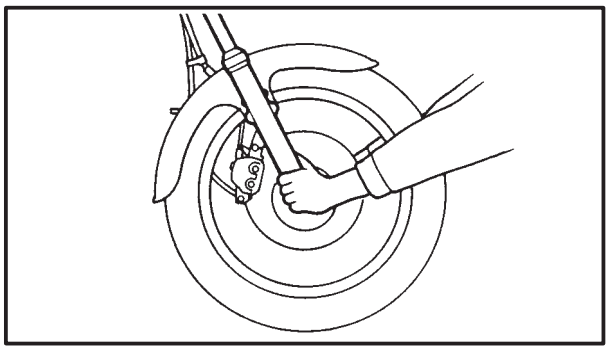

2. Check:
   - steering head
     Grasp the bottom of the front fork legs and gently rock the front fork.
     Looseness/binding — Adjust the steering head.

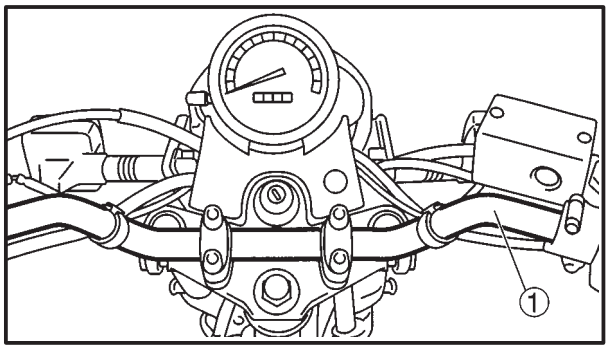

3. Remove:
   - handlebar ①

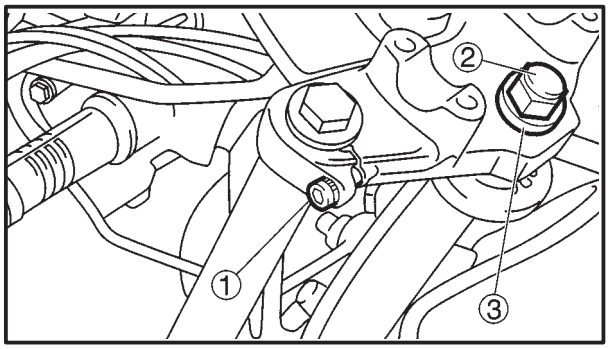

4. Loosen:
   - upper bracket pinch bolts ①
5. Remove:
   - steering stem nut ②
   - washer ③

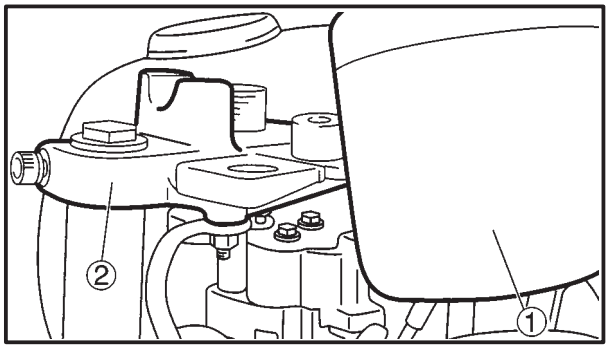

6. Remove:
   - speed meter ①
   - upper bracket ②

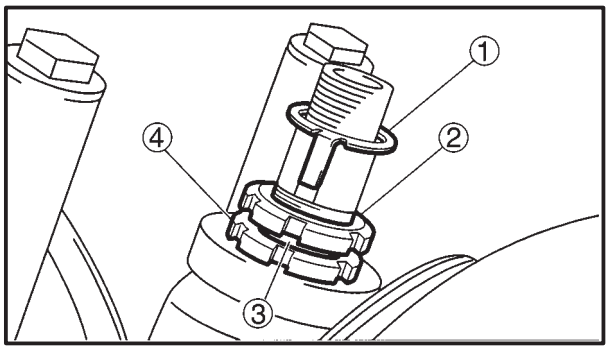

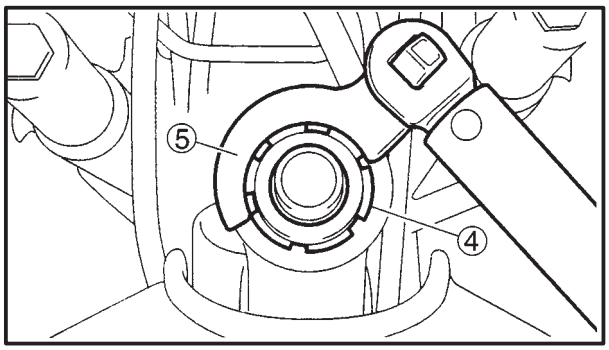

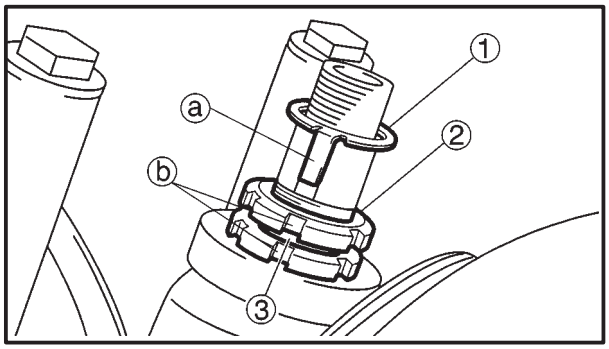

6.Adjust:
- steering head

▼▼▼▼▼▼▼▼▼▼▼▼▼▼▼▼▼▼▼▼▼▼▼▼▼▼▼▼▼▼▼▼

a. Remove the lock washer ①, the upper ring nut ②, and the rubber washer ③.
b. Loosen the lower ring nut ④ and then tighten it to specification with a ring nut wrench ⑤.

NOTE:

Set the torque wrench at a right angle to the steering nut wrench.

	Steering nut wrench **90890-01268**

	Lower ring nut (initial tightening torque) **38 Nm (3.8 m·kg)**

c. Loosen the lower ring nut completely, then tighten it to specification.

⚠ WARNING

Do not overtighten the lower ring nut.

	Lower ring nut (final tightening torque) **4 Nm (0.4 m·kg)**

d. Check the steering head for looseness or binding by turning the front fork all the way in both directions. If any binding is felt, remove the lower bracket and check the upper and lower bearings.
   Refer to “STEERING HEAD” in chapter 6.
e. Install the rubber washer ③.
f. Install the upper ring nut ②.
g. Finger tighten the upper ring nut ②, then align the slots of both ring nuts. If necessary, hold the lower ring nut and tighten the upper ring nut until their slots are aligned.
h. Install the lock washer ①.

NOTE:

Make sure that the lock washer tabs ⓐ sit correctly in the ring nut slots ⓑ.

▲▲▲▲▲▲▲▲▲▲▲▲▲▲▲▲▲▲▲▲▲▲▲▲▲▲▲▲▲▲▲▲

7. Install:
- steering stem nut — **110 Nm (11.0 m·kg)**
- upper bracket pinch bolt — **26 Nm (2.6 m·kg)**

CYLINDER HEAD

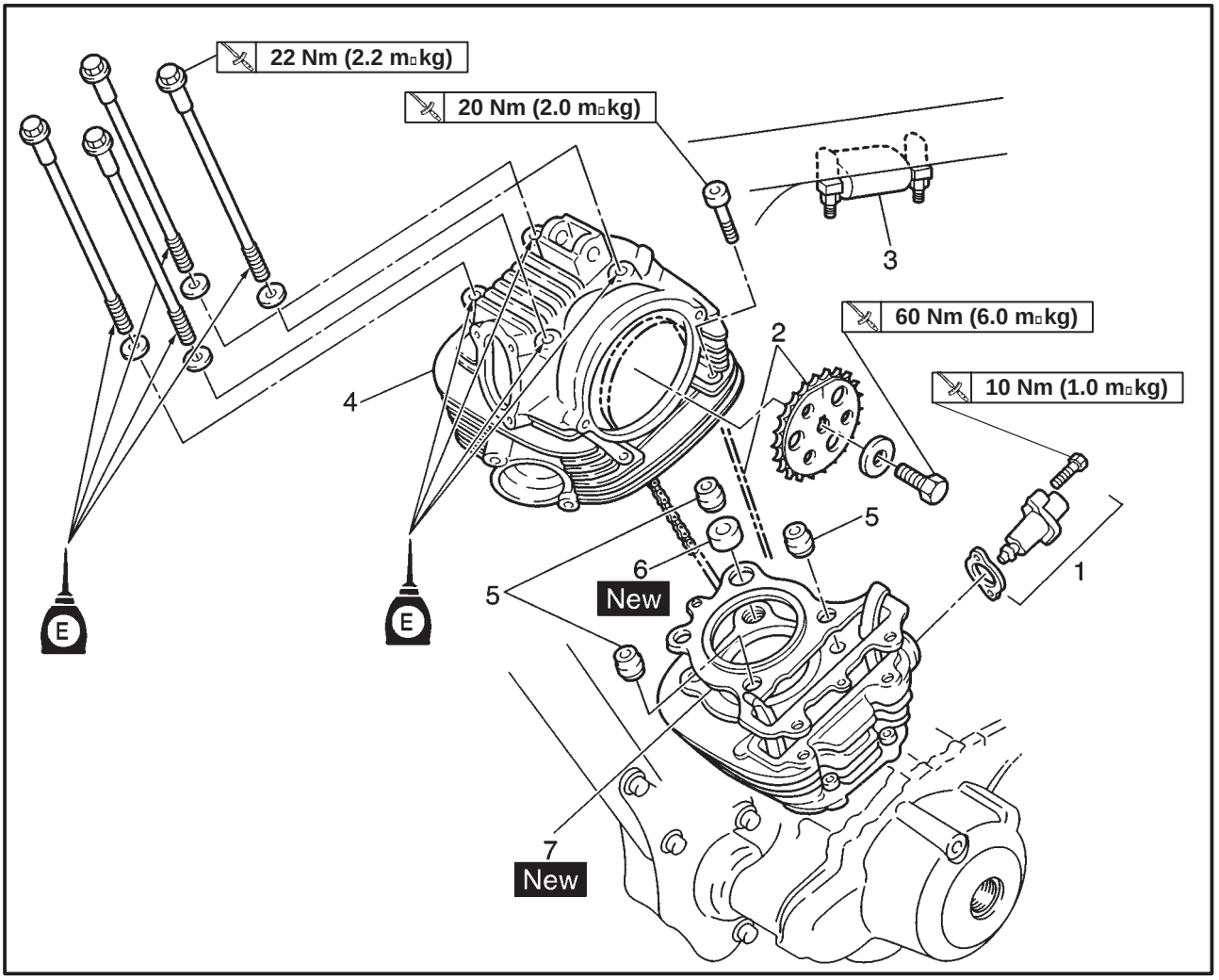

Order	Job name/Part name	Q'ty	Remarks
	Cylinder head removal		Remove the parts in order.
1	Timing chain tensioner assembly	1	Refer to "CYLINDER HEAD REMOVAL/INSTALLATION" section.
2	Cam sprocket/Timing chain	1/1	
3	Ignition coil	1	
4	Cylinder head	1	
5	Dowel pins	3	Refer to "CYLINDER HEAD INSTALLATION" section.
6	Gasket	1	
7	Cylinder head gasket	1	
			Reverse the removal procedure for installation.

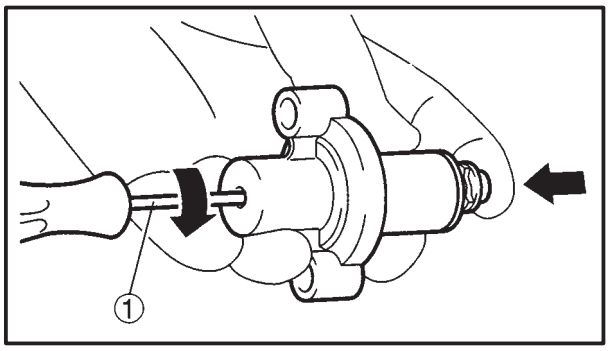

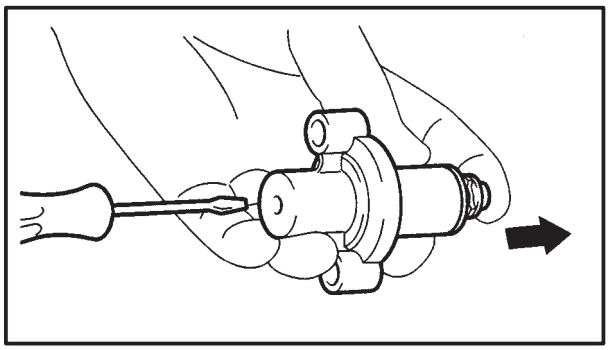

EB401430

CHECKING THE TIMING CHAIN TENSIONER

1. Check:
   - timing chain tensioner
     Cracks/damage/rough movement Replace.

▼▼▼▼▼▼▼▼▼▼▼▼▼▼▼▼▼▼▼▼▼▼▼▼▼▼▼▼▼▼▼▼

a. Lightly press the timing chain tensioner rod into the timing chain tensioner housing by hand.

NOTE:

While pressing the timing chain tensioner rod, wind it clockwise with a thin screwdriver ① until it stops.

b. Remove the screwdriver and slowly release the timing chain tensioner rod.
c. Make sure that the timing chain tensioner rod comes out of the timing chain tensioner housing smoothly. If there is rough movement, replace the timing chain tensioner.

▲▲▲▲▲▲▲▲▲▲▲▲▲▲▲▲▲▲▲▲▲▲▲▲▲▲▲▲▲▲▲▲

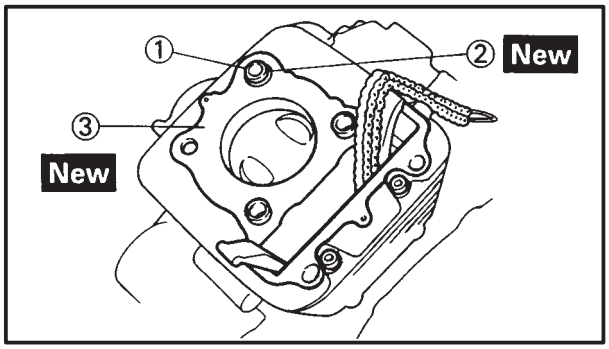

SR********

CYLINDER HEAD INSTALLATION

1. Install:
   - dowel pins ① New
   - gasket ②
   - gasket (cylinder head) ③ New

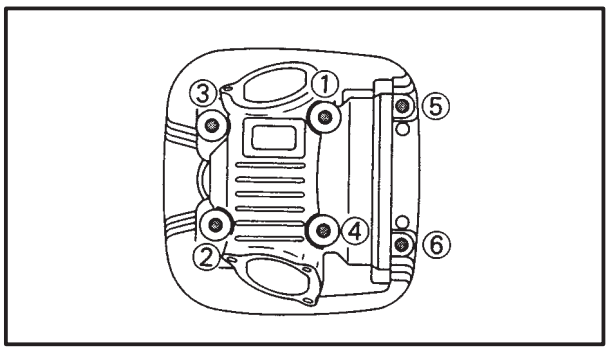

2. Install:
   - cylinder head

	M8 (1 □ 4)	22 Nm (2.2 m□kg)
	M8 (5 □ 6)	20 Nm (2.0 m□kg)

NOTE:

- Apply engine oil onto the nut threads.
- Tighten the bolts starting with the lowest numbered one.

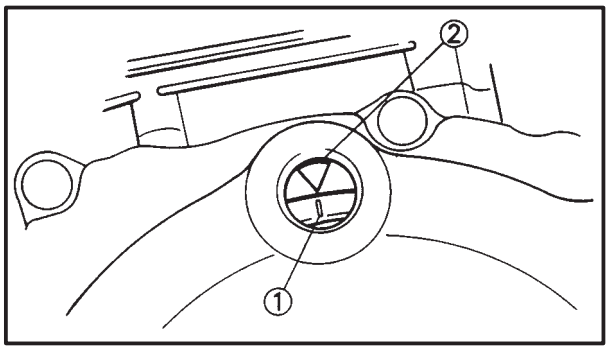

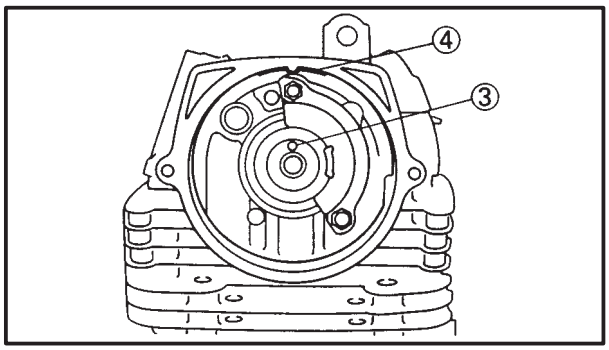

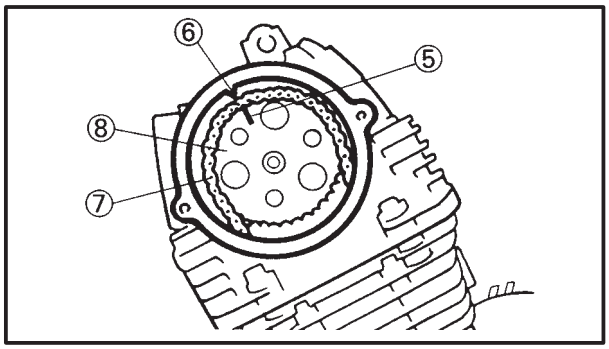

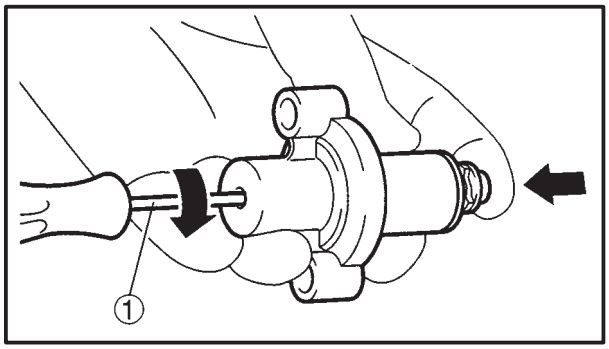

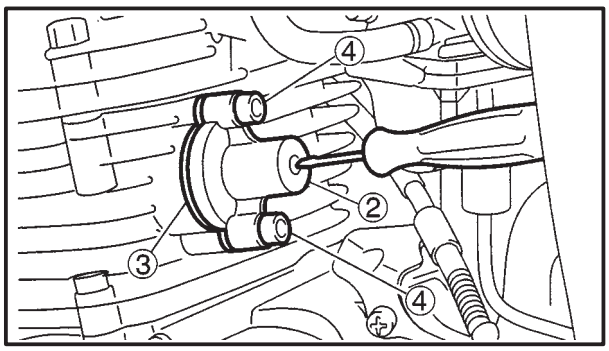

3. Install:
   - Cam sprocket
   - Timing chain

Installing steps:

- Turn the crank shaft counterclockwise until the slit ① matches the stationary pointer ②.
- Align the dowel pin ③ on the camshaft with the stationary pointer ④ on the cylinder head.
- Align the "I" mark ⑤ on the cam sprocket with the stationary pointer ⑥ on the cylinder head.
- Fit the timing chain ⑦ onto cam sprocket ⑧ and install the cam sprocket on the camshaft.

NOTE:

When installing the cam sprocket, keep the timing chain as tight as possible on the exhaust side.

CAUTION:

Do not turn the crankshaft during installation of the camshaft. Damage or improper valve timing will result.

- Remove the safety wire from the timing chain.

4. Install:
   - Plate washer
   - Bolt (timing chain)
5. Install:
   - timing chain tensioner

a. Lightly press the timing chain tensioner rod into the timing chain tensioner housing by hand.
b. While pressing the timing chain tensioner rod, wind it clockwise with a thin screwdriver ① until it stops.
c. With the screwdriver still inserted into the timing chain tensioner, install the timing chain tensioner ②, gasket ③ onto the cylinder block. Then, tighten the timing chain tensioner bolts ④ to the specified torque.

WARNING

Always use a new gasket.

	Timing chain tensioner bolt **10 Nm (1.0 m·kg)**

d. Remove the screwdriver, make sure that the timing chain tensioner rod releases, and tighten the cap bolt to the specified torque.

	Cap bolt **10 Nm (1.0 m·kg)**

6. Tighten:
   - Bolt (timing chain) **60 Nm (6.0 m·kg)**

NOTE:

Install the bolt while holding the magneto mounting bolt with a wrench.

7. Turn:
   - crankshaft
     (several turns counterclockwise)
8. Check:
   - Magneto rotor slit
     Align the stationary pointer with the crankcase cover (left).
   - Cam sprocket “I” mark
     Align the stationary pointer with the cylinder head.
     Out of alignment Adjust.
9. Check:
   - Valve clearance
     Refer to “VALVE CLEARANCE ADJUSTMENT” section in CHAPTER 3.

STEERING
UNDER BRACKET

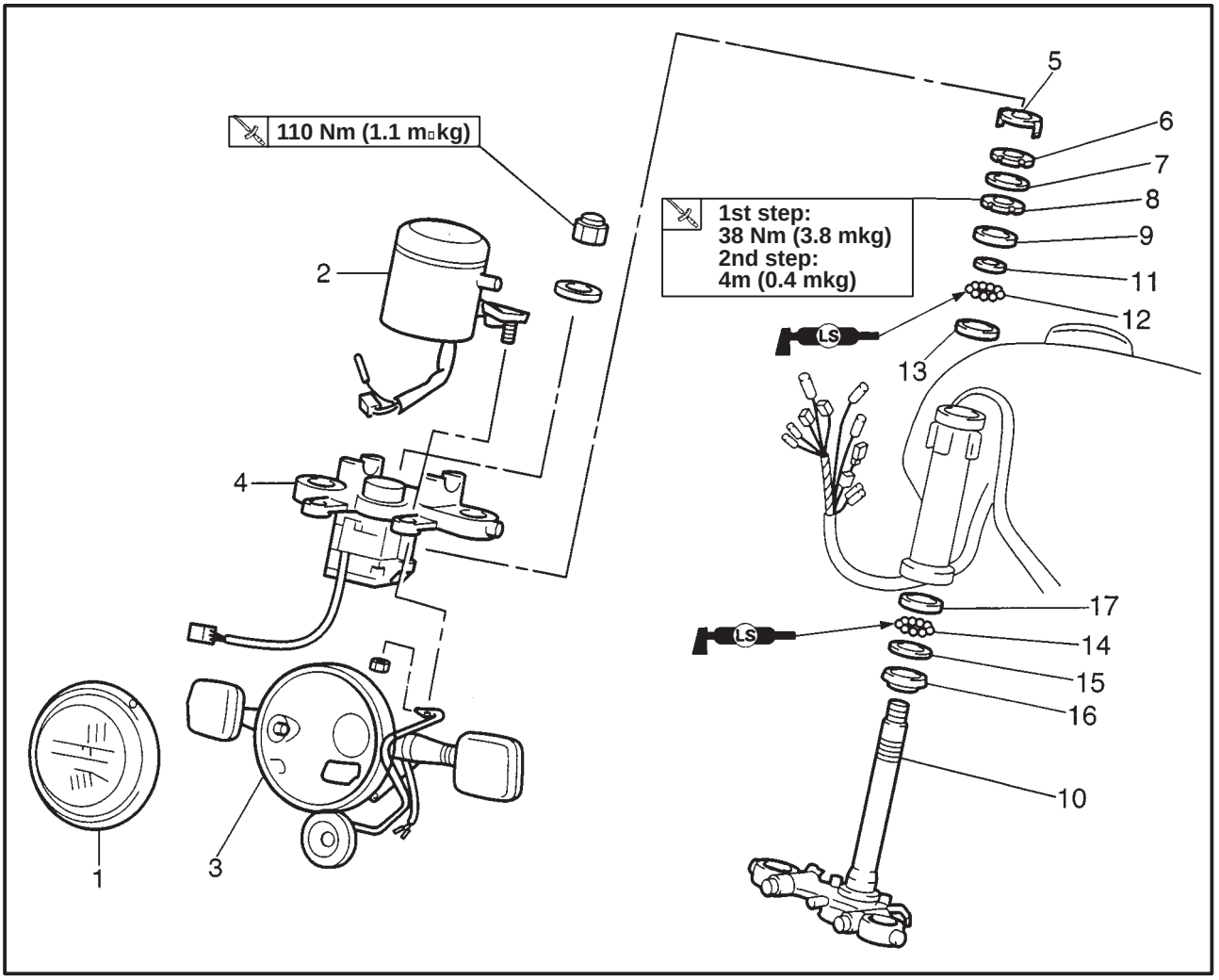

Order	Job name/Part name	Q'ty	Remarks
	Under bracket removal		Remove the parts in order.
	Front fork		Refer to "FRONT FORK" section.
	Handlebar		Refer to "HANDLEBAR" section.
1	Headlight unit	1	
2	Meter assembly	1	
3	Headlight stay	1	
4	Handlebar crown	1	**NOTE:**
5	Lock washer	1	Disconnect the connector.
6	Upper ring nut	1	
7	Rubber washer	1	Refer to "STEERING REMOVAL/INSTALLATION" section.
8	Lower ring nut	1	
9	Ball race cover	1	

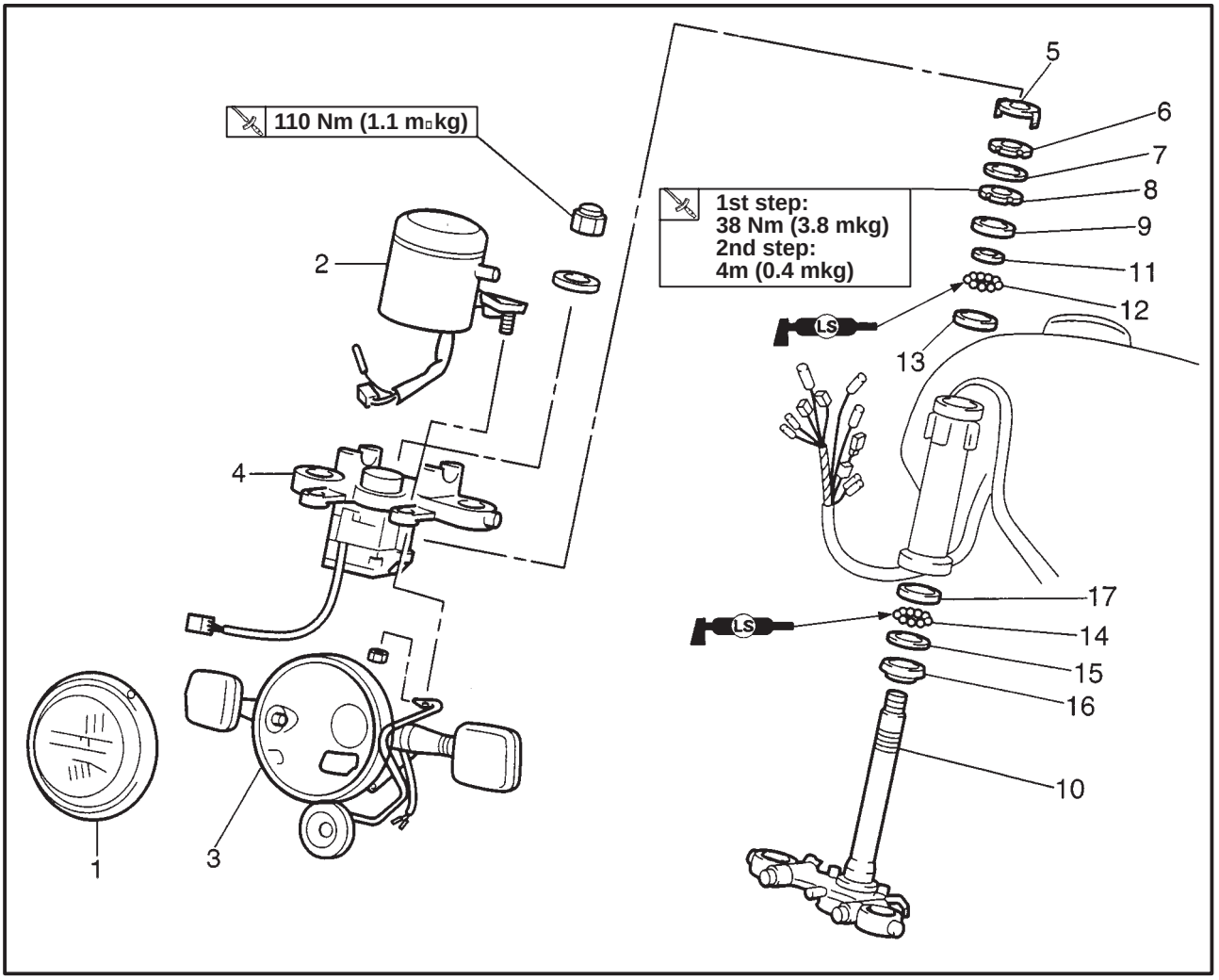

Order	Job name/Part name	Q'ty	Remarks
10	Under bracket	1	Refer to "STEERING REMOVAL/ INSTALLATION" section.
11	Bearing inner race	1	
12	Upper bearing	1	
13	Bearing outer race	1	
14	Lower bearing	1	
15	Bearing inner race	1	
16	Dust seal	1	
17	Bearing outer race	1	
			Reverse the removal procedure for installation.

’99 SR125 WIRING DIAGRAM

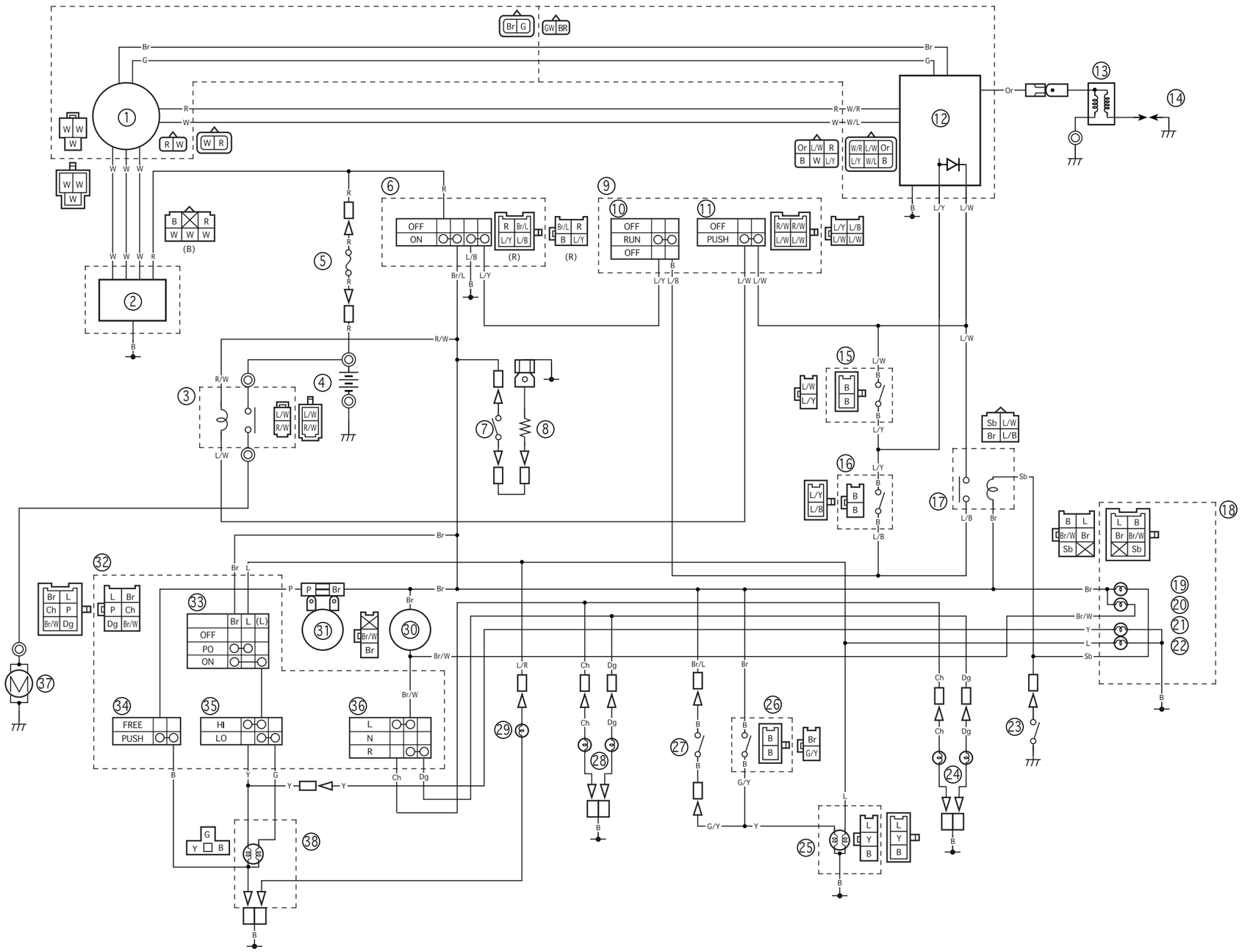

① C.D.I magneto
② Rectifier/Regulator
③ Starter relay
④ Battery
⑤ Fuse
⑥ Main switch
⑦ Thermo switch
⑧ Heater unit
⑨ Handlebar switches (right)
⑩ Engine stop switch
⑪ Starter switch
⑫ C.D.I unit
⑬ Ignition coil
⑭ Spark plug
⑮ Clutch switch
⑯ Sidestand switch
⑰ Neutral relay
⑱ Speedometer
⑲ Neutral indicator light
⑳ Turn indicator light
㉑ Hi-beam indicator light
㉒ Meter light
㉓ Neutral switch
㉔ Rear turn signal lights
㉕ Tail/Brake light
㉖ Front brake switch
㉗ Rear brake switch
㉘ Front turn signal lights
㉙ Auxilialy light
㉚ Flasher relay
㉛ Horn
㉜ Handlebar switches (left)
㉝ Light switch
㉞ Horn switch
㉟ Dimmer switch
㊱ Turn switch
㊲ Starting motor
㊳ Headlight

COLOR CODE

B	Black	Sb	Sky blue	G/Y	Green/Yellow	W/R	White/Red
Br	Brown	P	Pink	L/B	Blue/Black		
Ch	Chocolate	R	Red	L/R	Blue/Red		
Dg	Dark green	Y	Yellow	L/W	Blue/White		
G	Green	W	White	L/Y	Blue/Yellow		
L	Blue	Br/L	Brown/Blue	R/W	Red/White		
Or	Orange	Br/W	Brown/White	W/L	White/Blue		

YAMAHA PARTS & ACCESSORIES

Click on links below

Yamaha Motorcycle Original Equipment Parts & Online Diagrams

Yamaha Scooter OEM Parts & Online Diagrams

Motorcycle Helmet Closeout Sale

Yamaha Motorcycle Parts & Accessories

Save On All Motorcycle Tires

Motorcycle Gear Closeout Sale

High Visibility Motorcycle Gear

Cycle Gear – Free Shipping

Free Shipping On All Motorcycles

Discount Auto Parts – Free Shipping